TOP VIEW OF ALL SOCKET CONNECTIONS

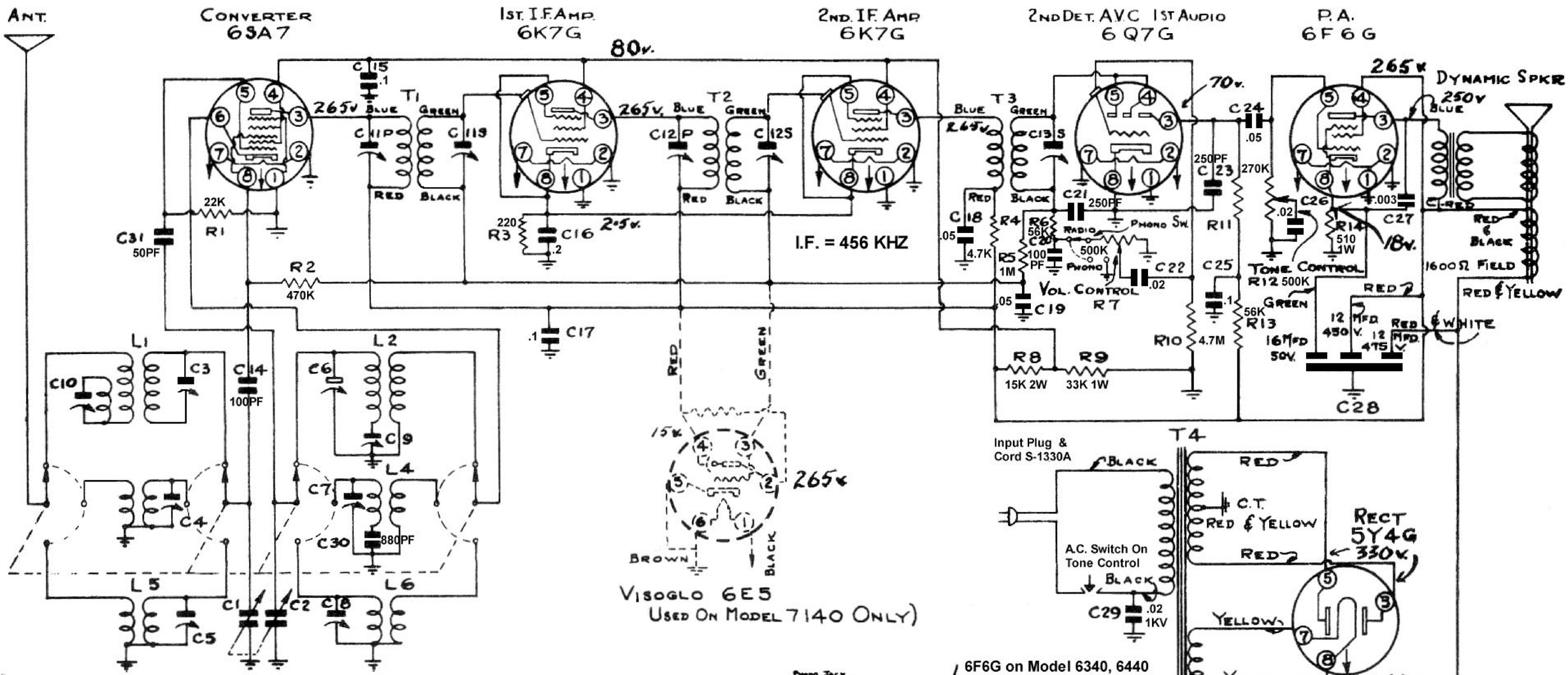


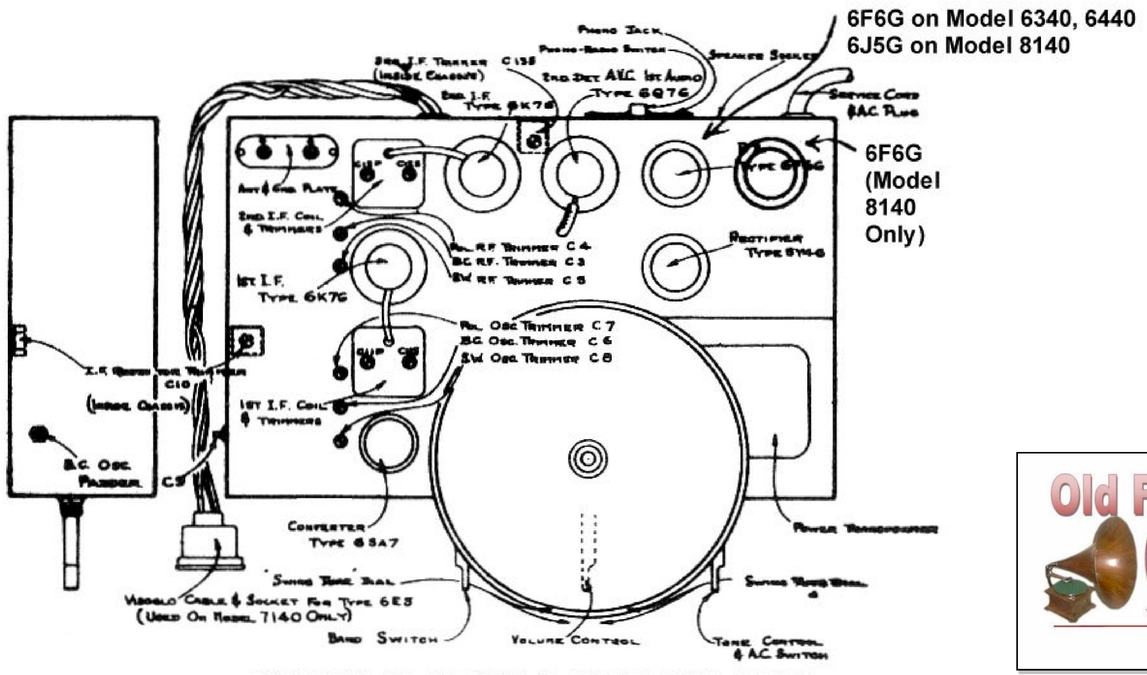


TOP VIEW OF CHASSIS & MODEL 6340 & 7140

# Sparton Model 7140

Old Fidelity
www.OldFidelity.ca
www.OldFidelity.com
... a place to find antique radios from 1925 to 1945